THE INFORMATION CONTAINED IN THIS DRAWING IS THE SOLE PROPERTY OF ANDERSON POWER PRODUCTS. ANY REPRODUCTION IN PART OR WHOLE WITHOUT THE WRITTEN PERMISSION OF ANDERSON POWER PRODUCTS IS PROHIBITED.

**Copyright 2010**

ANDERSON POWER PRODUCTS RESERVES THE RIGHT TO ALTER PRODUCT TYPES, THEIR TECHNICAL DATA, DIMENSION, STYLE AND ACCESSORIES WITHOUT PRIOR NOTIFICATION.

ACTUAL SIZE

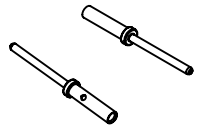

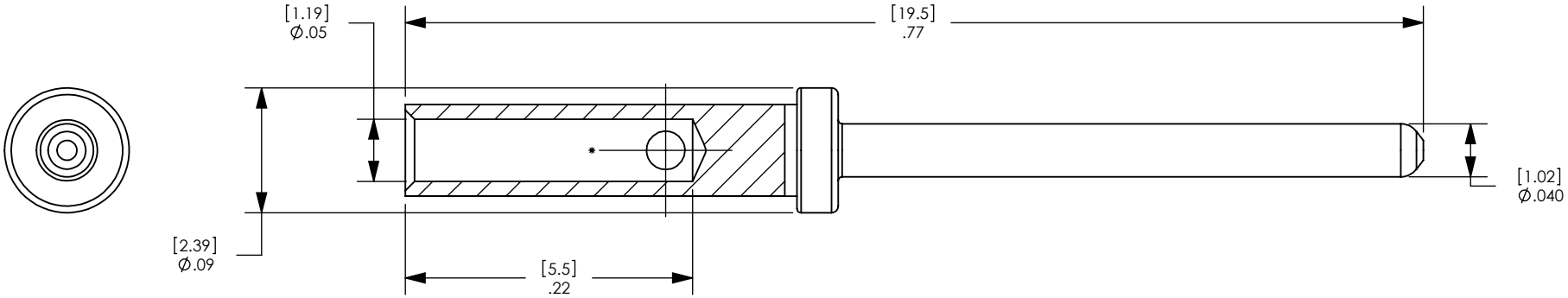


PART NO. 4803G3-BK

NOTES:
1. MATERIAL: BRASS
2. PLATING: GOLD PLATE

| REV. | DESCRIPTION | APPRV | DATE |
|---|---|---|---|
| | REVISIONS | | |

DIMENSIONS ARE IN: INCH[MM]

UNLESS OTHERWISE STATED

TOLERANCES:

| DECIMALS (INCH) | DECIMALS (MM) | ANGLES |
|---|---|---|
| .XX ± .015<br>.XXX ± .005 | .X ± .1<br>.XX ± .05 | ±.5° |

SURFACE FINISH:
MACHINED 128 [3.2]
MOLDED 64 [1.6]

MATERIAL: SEE NOTES

FINISH: SEE NOTES

3rd ANGLE PROJECTION

| APPROVALS | | |
|---|---|---|
| DRAWN | LLD | 12/23/10 |
| CHECKED | CMS | 12/23/10 |
| MFG APP | CHB | 12/23/10 |
| QC APP | UFN | 1/3/11 |
| ENG APP | BD | 1/3/11 |

-CAD GENERATED DRAWING-
DO NOT MANUALLY UPDATE
DO NOT SCALE

ANDERSON POWER PRODUCTS

TITLE
PPMX #20-24 AWG CRIMP PIN

| SIZE | DWG NO. | REV. |
|---|---|---|
| A/A4 | 114943S1 | 0 |
| **SCALE** 8:1 | **CADFILE** 03363 | **SHEET** 1 OF 1 |