THE INFORMATION CONTAINED IN THIS DRAWING IS THE SOLE PROPERTY OF ANDERSON POWER PRODUCTS. ANY REPRODUCTION IN PART OR WHOLE WITHOUT THE WRITTEN PERMISSION OF ANDERSON POWER PRODUCTS IS PROHIBITED.

REV.	DESCRIPTION OF CHANGES	BY:	DATE

COMPONENTS FOR SBE320/SBX350 MANUAL RELEASE BATTERY BRACKET

COMPONENT	QTY
BATTERY BRACKET	1
SCREWS	2
WASHERS	2
NUTS	2

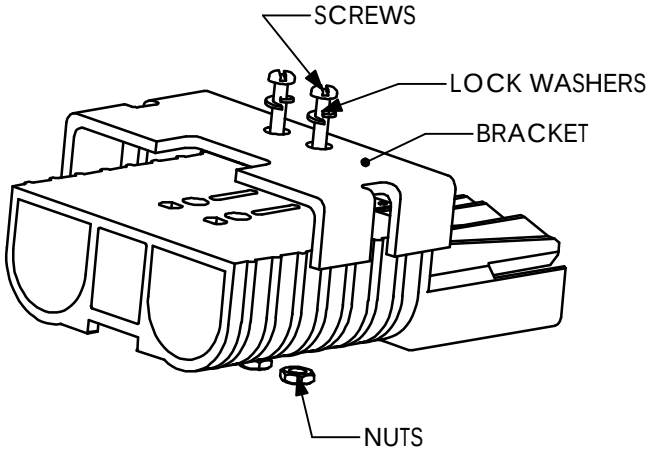

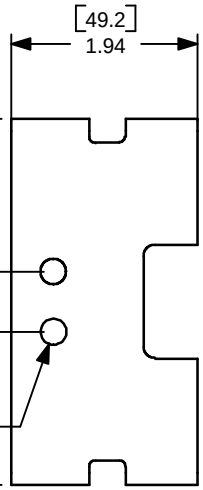

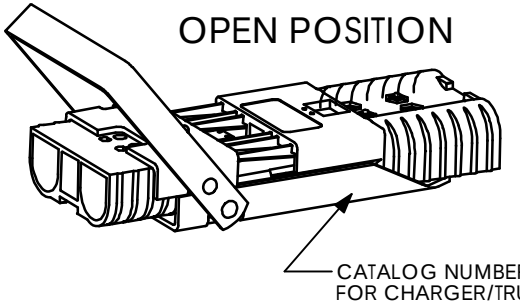

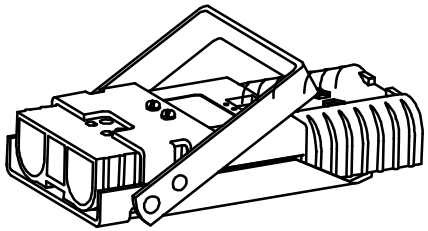

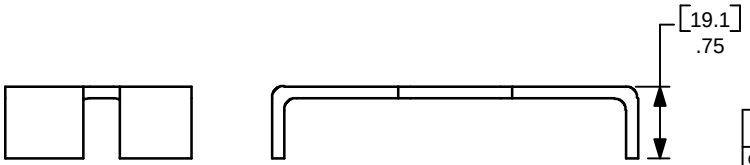

NOTES:
1. MATERIAL- COLD ROLLED STEEL, .12 THK
   FINISH- ELECTROSTATIC POWDER COAT- CRIMSON EPOXY
2. USE WITH CATALOG NUMBER 994G1
3. CONNECTOR SOLD SEPARATELY

NEXT ASSY	USED ON
APPLICATION	

ITEM NO.	PART OR IDENTIFYING NO.	NOMENCLATURE OR DESCRIPTION	MATERIAL SPECIFICATION	QTY REQD

COPYRIGHT 1999 ANDERSON POWER PRODUCTS. ALL RIGHTS RESERVED. UNAUTHORIZED REPRODUCTION HEREBY PROHIBITIED.

DIMENSIONS ARE IN INCHES
DIMENSIONS IN PARENTHESES [ ] ARE IN MILLIMETERS

TOLERANCES ARE:
2PL- ±.02 [±.5]

MATERIALS: SEE NOTES

FINISH SEE NOTES

DO NOT SCALE DRAWING

CAD GENERATED DRAWING, DO NOT MANUALLY UPDATE

APPROVALS		DATE
DRAWN	CMS	4/12/00
CHECKED	DJD	4/24/00
RESP ENG	UFN	4/24/00
MFG ENG	CHB	4/24/00
QUAL ENG	RPO	5/8/00

ANDERSON POWER PRODUCTS

CATALOG NUMBER 993G1
SBE320/SBX350 MANUAL RELEASE
BATTERY BRACKET

SIZE	SPECIFICATION:	REV.
A	114238S1	0

SCALE		
NONE	CADFILES/01210	SHEET 1 OF 1